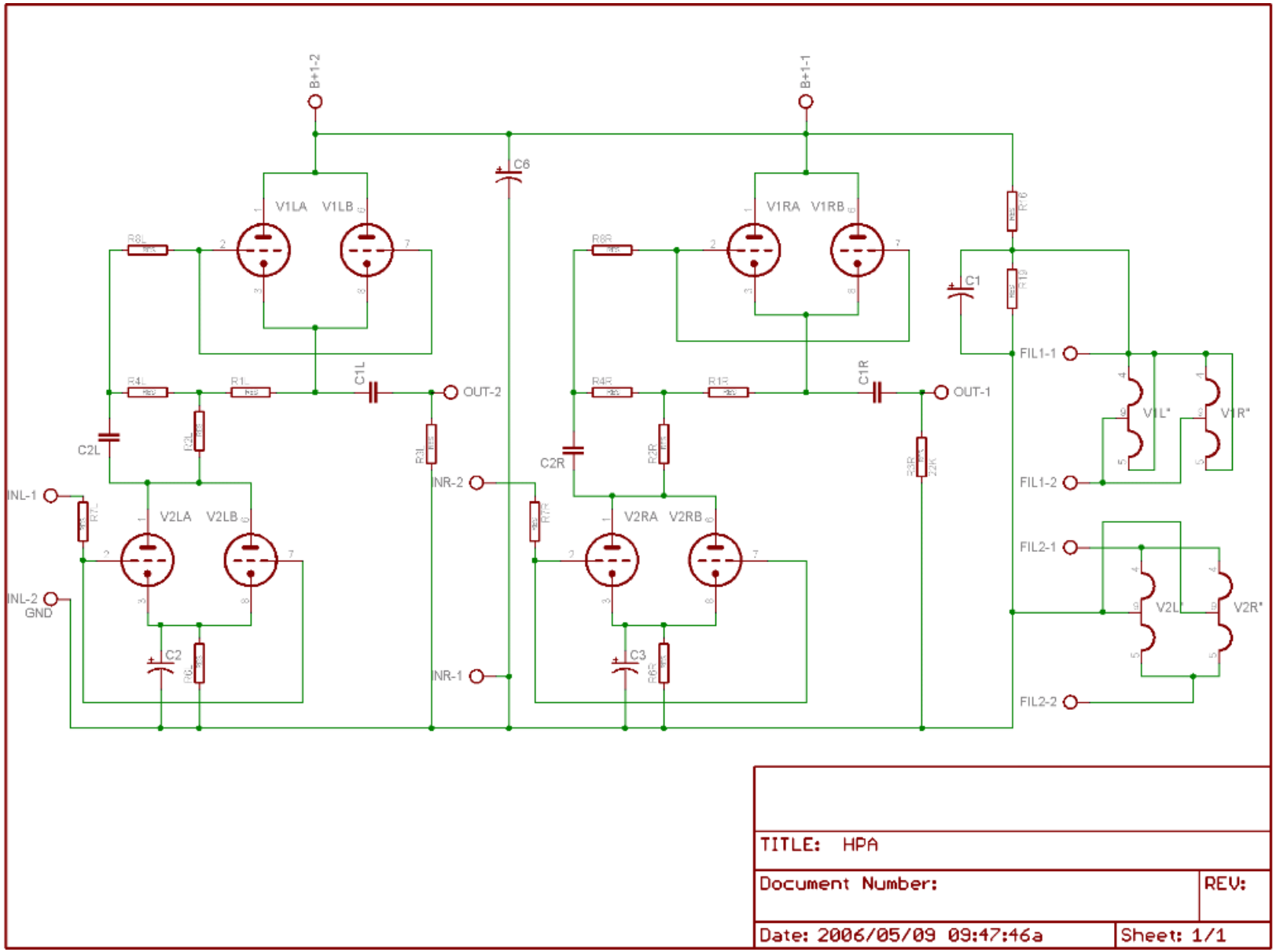

TITLE: HPA

Document Number:

REV:

Date: 2006/05/09 09:47:46a

Sheet: 1/1